Deck Plan w/ Roof Submittal

Drawings and Details

1
2
3
1/2" Thru Bolts
4
5
( )
Floor to Rafter Height
6
4" Sphere MAX
7 Handrails - See Fig.'s 1.2 and 1.3 for Details
36" min. Height
34"-38" above nosings
4⅜" Sphere MAX
8
6" Sphere MAX
Req'd. Flashing
9
1/2" Lag Bolts
Joist Hanger
10
1/2" Thru Bolts
11
Post base & anchor bolts
½" Rebar thru post
36" min.
First pour 8" to 12"
Footer Type 'A'
Footer Type 'B'

Typical Section
Figure 1.1

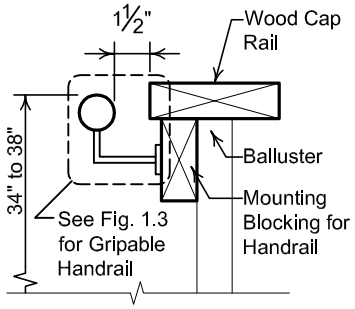

Handrail Details
Figure 1.2

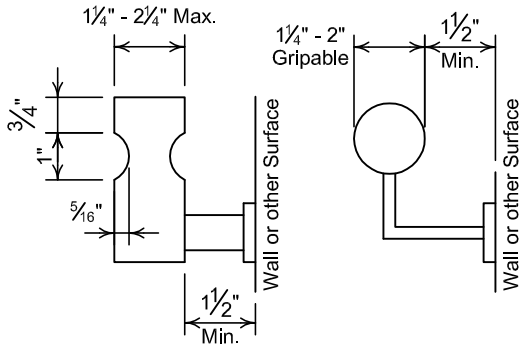

Acceptable Handrail Grips
Figure 1.3